365

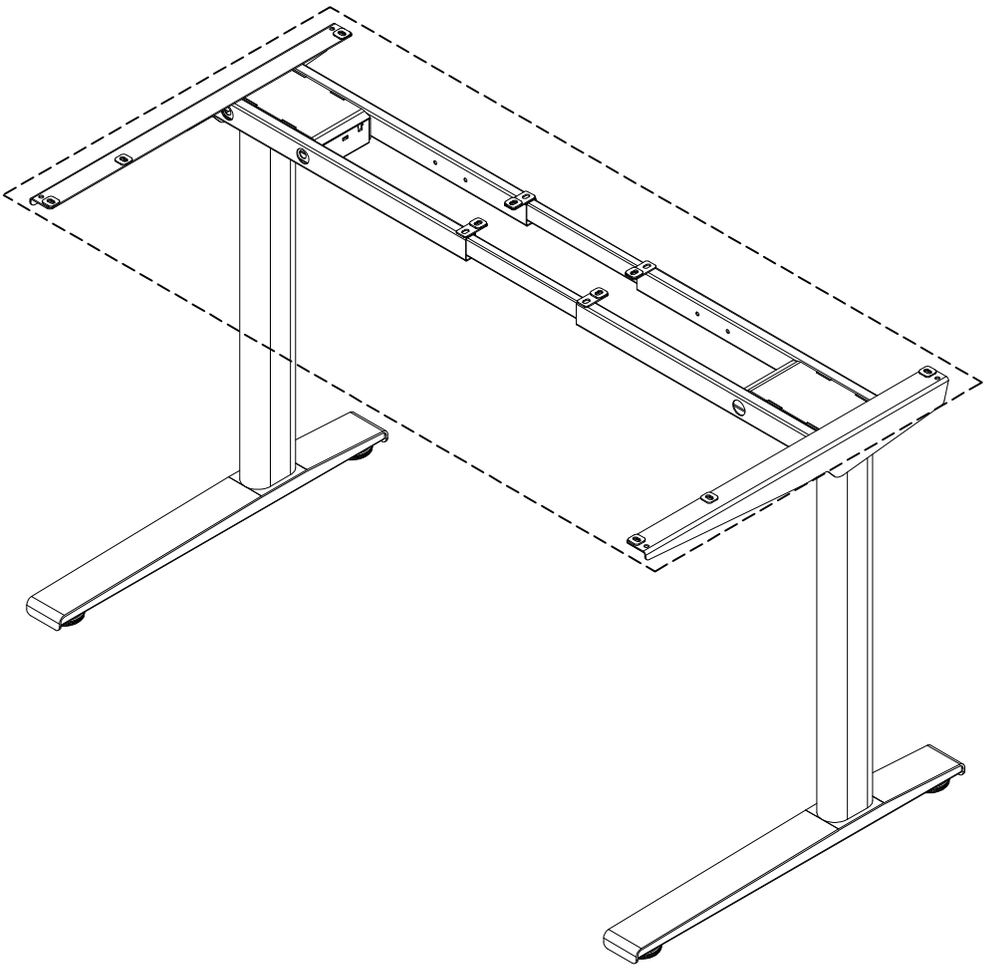

ERGHOS ELLIPSE



NUMBER OF PEOPLE
X2

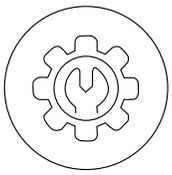

ASSEMBLY TIME
15 MINUTES



PLEASE ASSEMBLY
ON THE CARPET

erghos®

INSTALLATION INSTRUCTION

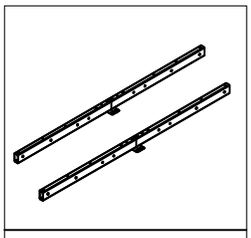

2x Rail Sets

①

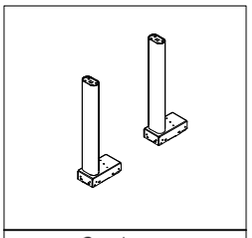

2 x Leg

②

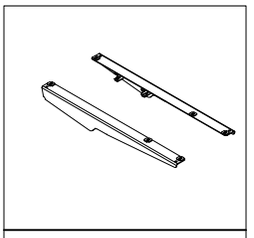

2 x Worktop Support

③

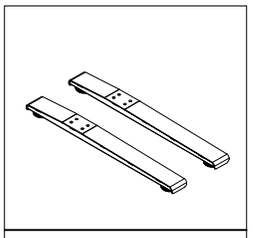

2 x Feet

④

HARDWARE INCLUDED

A	QTY:8

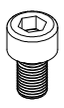

M6*10

B	QTY:8



M8*16

C	QTY:4

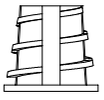

M6

D	QTY:6

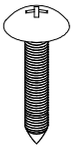

ST5.0*20

E	QTY:4

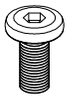

M6*20

TOOLS INCLUDED



M5

TOOLS REQUIRED

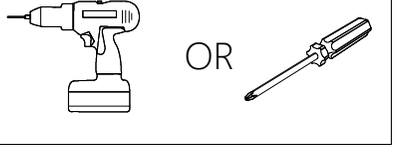

INSTALLATION INSTRUCTION

STEP 1

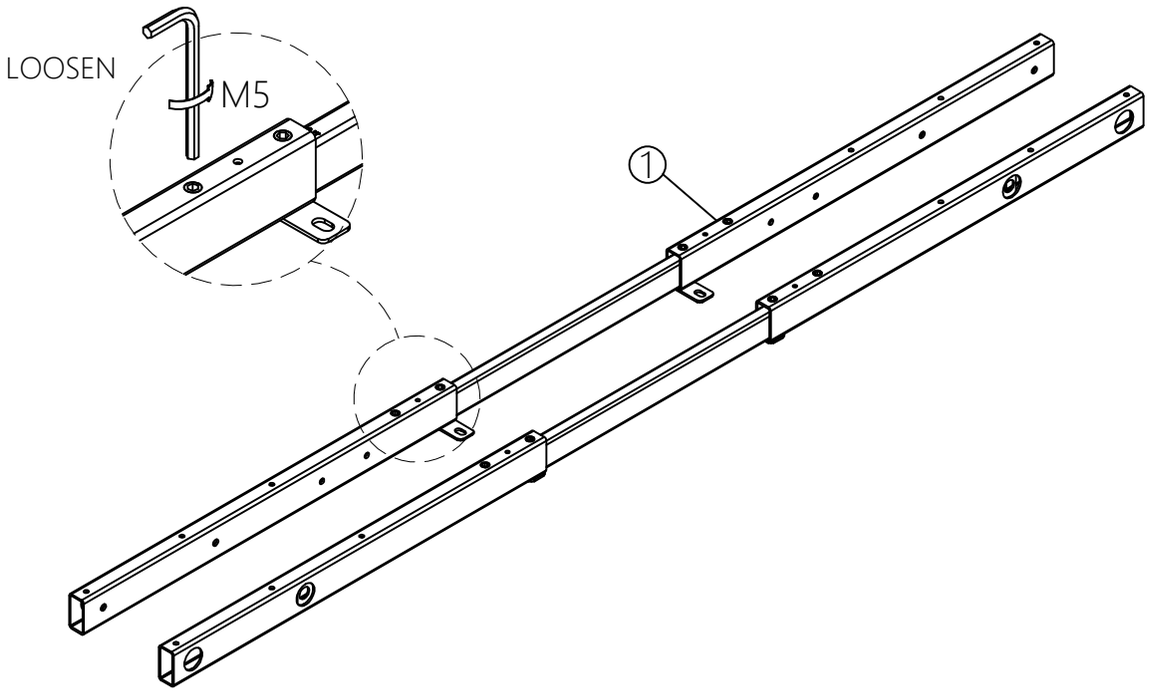

STEP 2

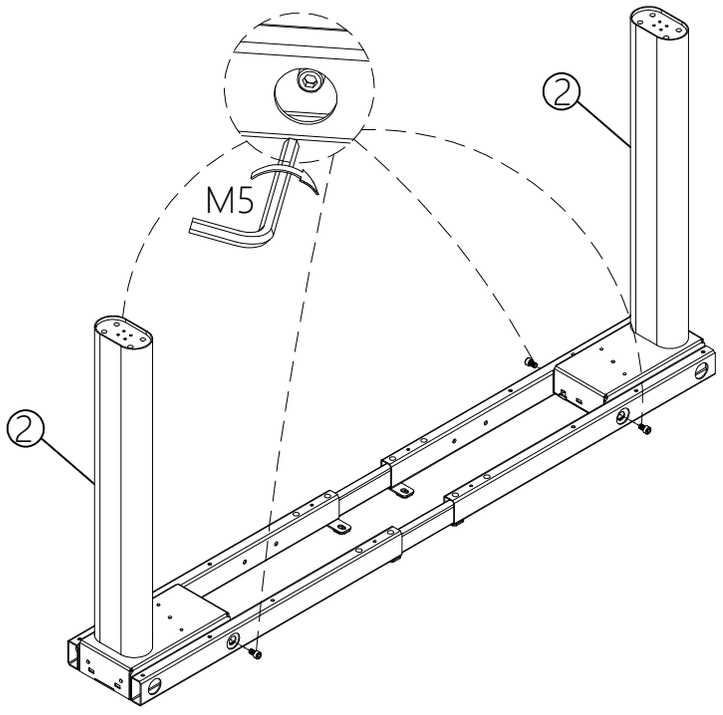

A	QTY:4
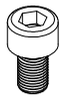	
M6*10	

INSTALLATION INSTRUCTION

STEP 3

A	QTY:4

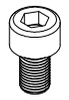

M6*10

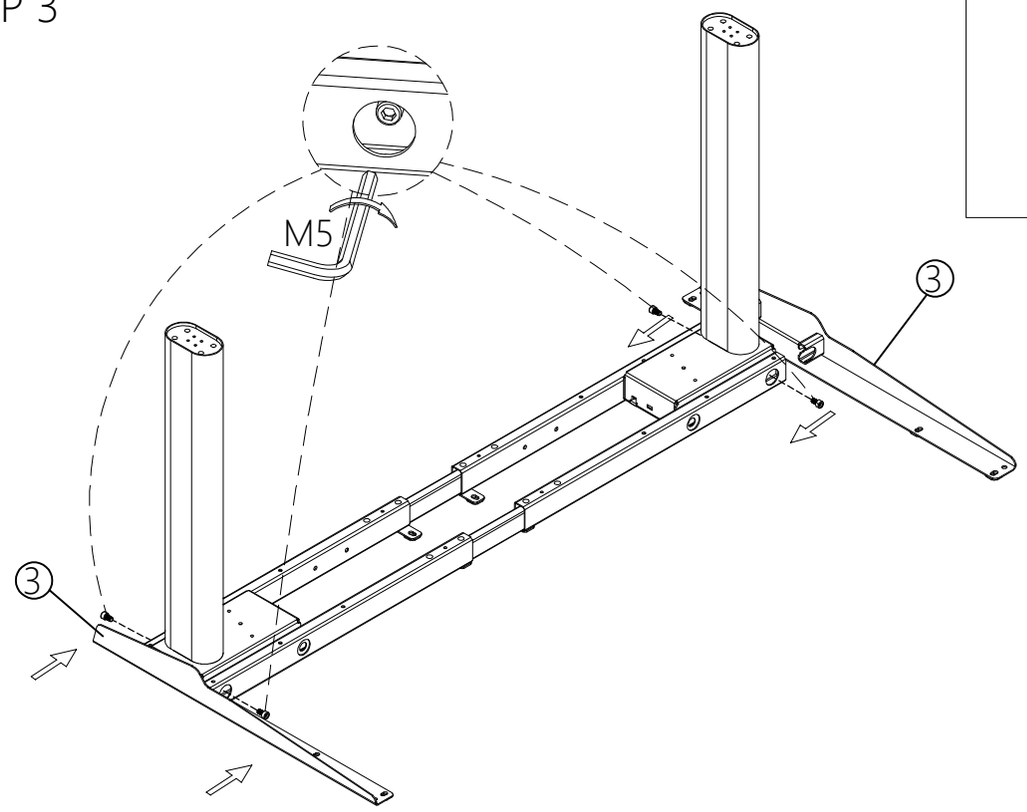

STEP 4

B	QTY:8

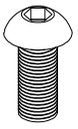

M8*16

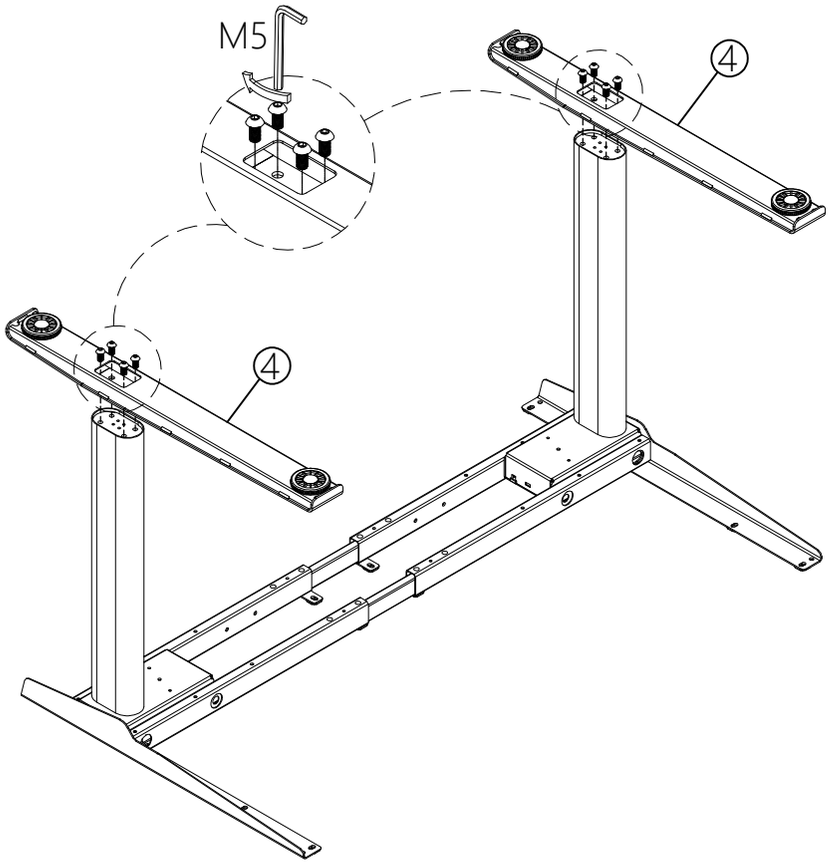

INSTALLATION INSTRUCTION

D	QTY:6
	ST5.0*20

E	QTY:4
	M6*20

C	QTY:4
	M6

STEP 5

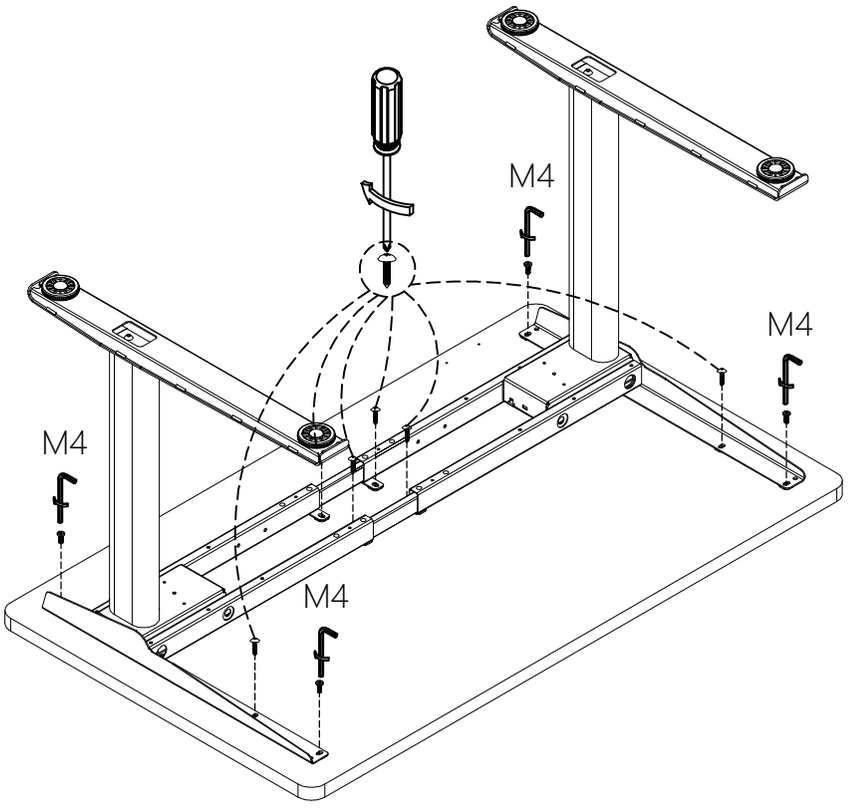

STEP 5

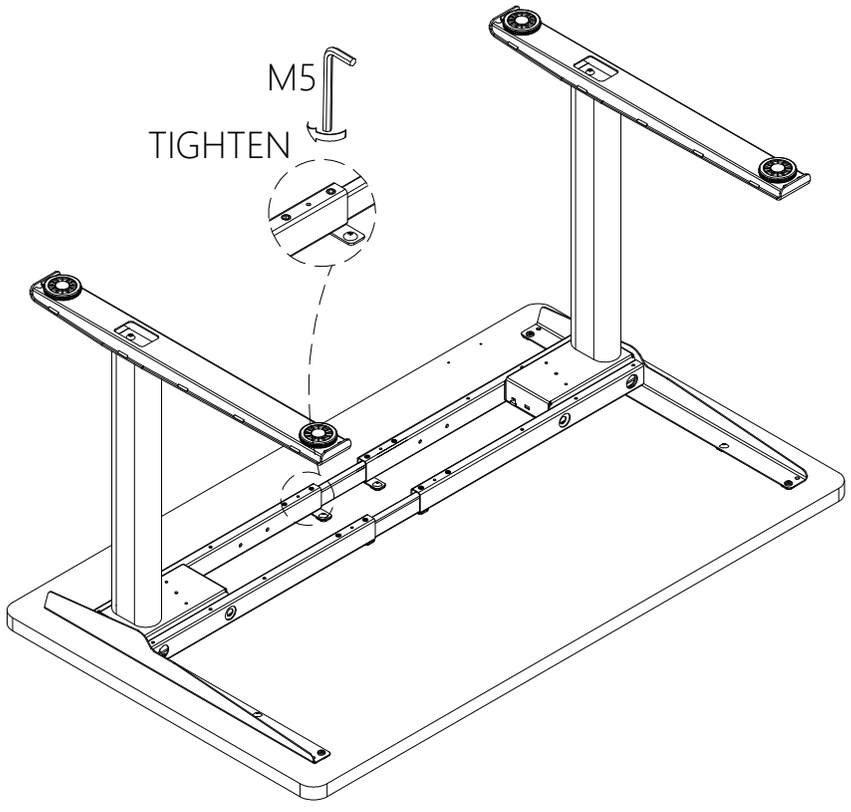

erghos®

Have any questions, Please contact us.



V1